THE REFLECTOR

ISSUE #4
APRIL 2022

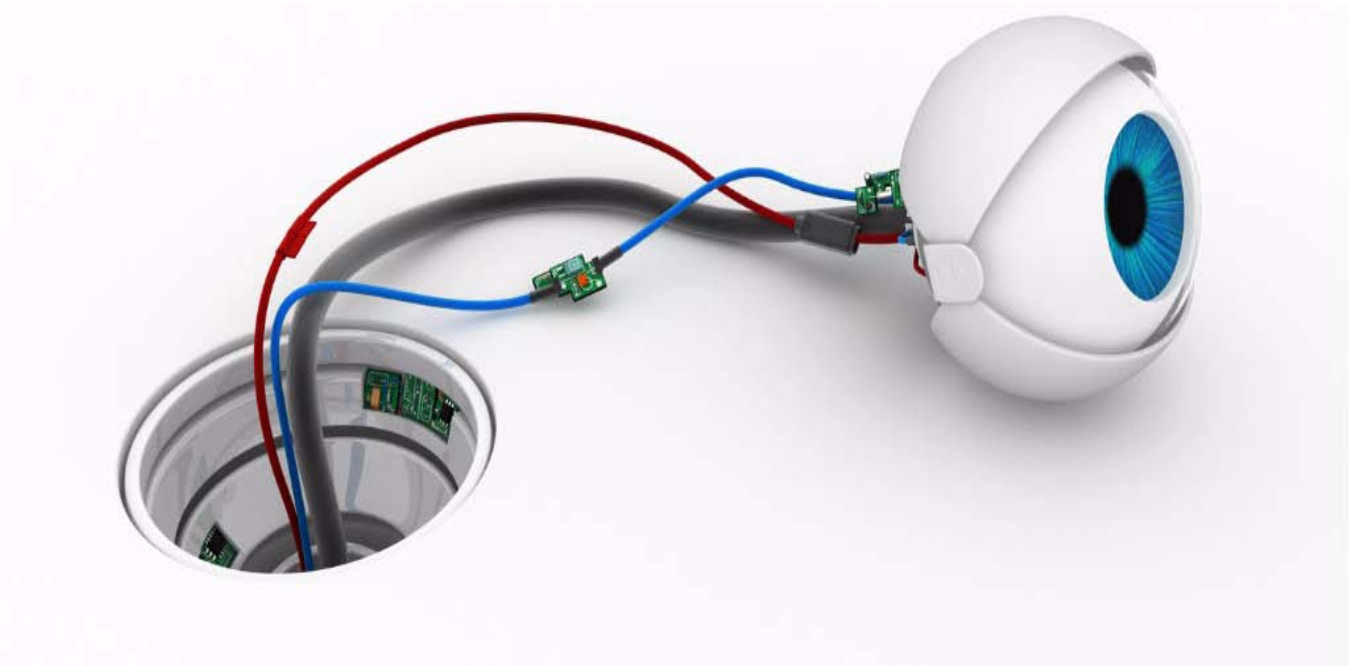

IEEE
Advancing Technology for Humanity

TABLE OF CONTENTS

Reverse Bias

Karen Panetta, Reflector Editor

"Industry Engineers are vocational." These are the words that introduced me to the long standing battle of the biases between engineers in academia versus engineers in industry.

The response came quickly, "We real engineers consider ourselves professionals that are solving real world problems. Of course, you know the saying, those who can't do, teach."

As a witness to this battle, I was now holding back the laughter. I'd like to meet anyone who has ever gone through an undergraduate program without encountering a Ph.D. that couldn't teach their way out of a paper bag. Note, having a Ph.D. is not a necessary and sufficient condition for being a decent teacher.

My second thought was, "Would you ever go to a doctor that never saw a live patient? Then, why would we not want our engineers to have industry experience putting the theory into practice for the benefit of society?"

I'm considered quite an anomaly in the academic world because I came from industry to the university. Of course, showing up on campus in a pink suit and matching high heel shoes didn't help me blend in either. Nevertheless, I have always continued working with industry and cannot imagine myself working any other way. If I didn't have a real client application to target my research, I honestly think I would be bored. I also think the students in my lab wouldn't be the most sought after graduating students on the campus. Their experience working with our industry collaborators makes them ready to jump in on projects as immediate technical contributors upon graduation.

When interviewing for one of my industry consulting positions, I recall the manager setting the expectations very clearly. He said, "We expect that when you are done, you will deliver a working product and not some useless publication."

This perception from the industry side considers academics as students who never leave the comforts of school and work in a vacuum. As an aside, I love to vacuum, not work in one, yet more proof that I am a walking anomaly.

Industry complains to universities that students don't get enough "training" in valuable skills that can allow them to be immediate technical contributors. Universities fight back that skills are not "scholarly", and that students are learning to be innovative critical thinkers. Oh really? How can that be possible when the people teaching them have never been outside the safety of the walls of academia and have no idea what it's like out there in the real world?

One Professor responded, "Why do you keep saying we don't live in the real world?" The response, "Because in the real world, you can be fired from your job, and you actually worry about economic downturns".

At this point, I am ready to send the two sides into a dark room with rusty saws to fight it out.

How can one side live without the other? Industry needs fresh new perspectives that young engineers have to offer, while the Universities need industry to help provide relevant experiences outside the classroom that exercise and strengthen everything that students learn

from lectures, laboratory assignments and team projects. Why is the concept of creating a synergistic relationship that is mutually beneficial for academia and industry so difficult for some people to grasp? Maybe because some faculty members need to take those internships themselves and see what is really going on in industry. Maybe we need to get the industry people into the classrooms teaching and sharing their experiences with our young people.

Good news, it is actually happening! IEEE industry engineers are among some of our local institutions best assets as adjunct instructors and campus research labs are now working hand in hand on industry funded campus projects. Guess what? No one has caught cooties for walking on both sides of industry and academe!

IEEE has helped academia by getting students to take on real world challenges. One of our own Boston student members won the "People's Choice Award" in the IEEE President's humanitarian challenge. I find it inspiring that this young man has touched millions of lives with his innovative work. He had to work with doctors, politicians, and social organizations to accomplish a feat that governments have failed to overcome. He knew no limits and worked around red-tape that most others would have run away from. He has made all of us at IEEE very proud and we should be very proud of his mentors and academic advisor for encouraging him.

His advisor got it right and has learned to reverse the biases. Teach the engineering, get students to think outside the box, collaborate with industry, and change the world. Yes, his advisor definitely walks on both sides of academia and industry. What is more is his advisor does it all in high heels

Call for Articles

Now that the Reflector is all electronic, we are expanding the content of the publication. One of the new features we will be adding are technical, professional development, and general interest articles to our members and the local technology community. These will supplement the existing material already in our publication.

Technical submissions should be of reasonable technical depth and include graphics and, if needed, any supporting files. The length is flexible; however, a four to five page limit should be used as a guide. An appropriate guide may be a technical paper in a conference proceeding rather than one in an IEEE journal or transaction.

Professional development or general interest articles should have broad applicability to the engineering community and should not explicitly promote services for which a fee or payment is required. A maximum length of two to three pages would be best.

To ensure quality, technical submissions will be reviewed by the appropriate technical area(s). Professional/interest articles will be reviewed by the Publications Committee for suitability.The author will be notified of the reviewers' decision.

The Reflector is published the first of each month. The target submission deadline for the articles should be five weeks before the issue date (e.g., June 1st issue date; article submission is April 27). This will allow sufficient time for a thorough review and notification to the author.

We are excited about this new feature and hope you are eager to participate!
Submissions should be sent to;
ieeebostonsection@gmail.com

IEEE Boston Section Online Courses:

(Students have 180 day access to all online, self-paced courses)

Electronic Reliability Tutorial Series

Full course description and registration at ,
http://ieeeboston.org/electronic-reliability/

High Performance Project Management

Full course description and registration at ,
http://ieeeboston.org/high-performance-project-management-online-course/

Introduction to Embedded Linux Part I

Full course description and registration at ,
http://ieeeboston.org/introduction-to-embedded-linux-part-i-el201-online-course/

Embedded Linux Optimization - Tools and Techniques

Full course description and registration at ,
http://ieeeboston.org/embedded-linux-optimization-tools-techniques-line-course/

Embedded Linux Board Support Packages and Device Drivers

Full course description and registration at ,
http://ieeeboston.org/embedded-linux-bsps-device-drivers-line-course/

Software Development for Medical Device Manufacturers

Full course description and registration at ,
http://ieeeboston.org/software-development-medical-device-manufacturers-line-course/

Fundamental Mathematics Concepts Relating to Electromagnetics

Full course description and registration at ,
http://ieeeboston.org/fundamental-mathematics-concepts-relating-electromagnetics-line-course/

Reliability Engineering for the Business World

Full course description and registration at ,
http://ieeeboston.org/reliability-engineering-business-world-line-course/

Design Thinking for Today's Technical Work

http://ieeeboston.org/design-thinking-technical-work-line-course/

Fundamentals of Real-Time Operating Systems

http://ieeeboston.org/fundamentals-of-real-time-operating-systems-rt201-on-line-course/

CALL FOR IEEE BOSTON SECTION AWARDS NOMINATIONS (2021)

DISTINGUISHED SERVICE AWARD

Description - The purpose of the Distinguished Service Award is to honor an IEEE Boston Section member who has made exceptional and distinguished contributions to the Boston IEEE Section. The Distinguished Service Award is to honor an IEEE Boston Section member who has made exceptional and distinguished contributions to the Boston IEEE Section. This award is a wood, engraved plaque with the recipient's' citation.

Administration - The Distinguished Service Award will be administered by the Boston Section's Awards Committee. The Awards Committee will submit their recommendations to the Section's Executive Committee for approval.

Eligibility - Individuals nominated for this award must be members of the Boston Section and the IEEE. The award is based upon evidence of distinguished service to the Boston Section. Selection criteria include leadership roles and leadership quality, innovative and important services/contributions to the Boston Section

DISTINGUISHED MEMBER AWARD

Description - The purpose of this award is to recognize distinguished long-term service to the Boston Section of the IEEE and significant contributions in an IEEE field of interest. The Distinguished Member Award recognizes outstanding long-term service (10-years or more) to the Boston Section and significant contributions in an IEEE field of interest This award is a wood, engraved plaque with the recipient's' citation

Administration - The Distinguished Member Award will be administered by the Boston Section's Awards Committee. The Awards Committee will submit their recommendations to the Section's Executive Committee for approval.

Eligibility - Individuals nominated for this award must have been members of the Boston Section for at least the previous ten (10) years. Multiple awards may be given each year, if suitable candidates are nominated. Individuals nominated for this award must currently be members of the Boston Section and members of the IEEE. The award is based upon evidence of distinction in long-term service to the Boston Section and for contributions to the fields of interest to the IEEE. Selection criteria include leadership roles and leadership quality, innovative and important contributions to the Boston Section, service and dedication to the Boston Section, and technical achievements in the fields of interest to the IEEE.

STUDENT ACHIEVEMENT AWARD

Description - The purpose of the Student Achievement Award is to recognize a college student who demonstrates the potential to become distinguished leader and outstanding contributor in an IEEE field of interest. This award is a wood, engraved plaque with the recipient's' citation The Student Achievement Award is to recognize a college student who demonstrates the potential to become a distinguished leader and outstanding contributor in an IEEE field of interest.

Administration - The Student Achievement Award will be administered by the Boston Section's Awards Committee. The Awards Committee will submit their recommendations to the Section's Executive Committee for approval.

Eligibility - An individual nominated for this award must be a student (sophomore year or higher), in good standing, at an institution of higher education located in the Boston Section or be a legal resident within the Boston Section who is attending an institution of higher education outside the Section. The nomination must be submitted by, or endorsed by, the student's major professor, academic advisor or Dean of the department/college they are attending. All nominees' major field of study must be in an IEEE field of interest. The award is based upon evidence of distinguished leadership, accomplishment, and/or outstanding contributions that further the aims of the IEEE.

The deadline for submitting nominations for the 2021 Boston Section Awards is Monday, February 28, 2022.

Nominations can be submitted to the Boston Section Awards Committee at ieeebostonsection@gmail.com

Consumer Technology Society
Call for Volunteers!

We are currently looking for volunteers who would be interested in pushing forward the mission of the Consumer Technology (CT-S), Boston Chapter. The chapter is looking for volunteers to help organize chapter meetings and help meet the needs of the local CT-S member needs.

The Boston Section is organizing chapters into groups of similar technical interest areas to pool their resources for easier and better chapter collaboration in planning the chapter events.

If you have interest in volunteering for a chapter leadership position or are interested in learning more about what these volunteer positions may entail, please send an email to Karen Safina in the IEEE Boston Section office at, ieeebostonsection@gmail.com

Aakash Deliwala, Chair, IEEE Boston Consumer Technology Chapter

Engineering in Medicine & Biology Society
Call for Volunteers!

We are currently looking for volunteers who would be interested in pushing forward the mission of the Engineering in Medicine & Biology Society (EMBS), Boston Chapter. The EMBS - Boston Chapter was recently approved in July 2021, and we're looking to make a significant impact in the area of Biomedicine, Bioengineering, and Biotechnology in the region. The chapter is looking for volunteers to help organize chapter meetings and help meet the needs of the local EMBS members.

The Boston Section is organizing chapters into groups of similar technical interest areas to pool their resources for easier and better chapter collaboration in planning the chapter events.

If you have interest in volunteering for a chapter leadership position or are interested in learning more about what these volunteer positions may entail, please send an email to Karen Safina in the IEEE Boston Section office at, ieeebostonsection@gmail.com.

Aseem Singh, Marie Tupaj, Co-Chairs, Boston EMBS Chapter

IEEE Video Series

A collaborative discussion panel featuring esteemed members from the Institute of Electrical and Electronics Engineers has convened in 2021 to produce educational video presentations that embrace IEEE's mission of advancing technology for humanity.

Among the programs they've produced include "Electric Vehicles: Fun Saving Our Planet", "Greener Power For More Electric Vehicles", "Overcoming Nuclear Fears To Achieve Net Zero CO2 By 2050" and "Achieving a Net Zero Carbon Future", "Green Energy's Economic Progress", and "Net-Zero CO2 with Nuclear, Hydrogen and Geothermal". Projects currently in production include the expansive topic of futurology, with a focus on increasing the efficiency and transformation of aging electrical power generating stations and infrastructure to accommodate nuclear power; reviewing the viability of alternative energy (such as geothermal, wind and solar); and focusing on 'cleaner' fossil fuels that are more environmentally-friendly to slow the rate of climate change.

These shows are produced and directed by Lennart E. Long, IEEE Senior Life Member from the Executive Committee and Past Chair of the Boston Section; Dr. Paul H Carr, BS, MS, MIT; PhD Brandeis U, IEEE Life Fellow; Dr. Ted Kochanski, SB (MIT), Ph.D (U.Texas, Austin), IEEE Global Education for Microelectronic Systems and former Boston Section Chair; and Dr. Ken Laker, B.E. (Manhattan College), M.S. and Ph.D. (New York University), IEEE Life Fellow and past President of IEEE.

The panel is moderated by five-time Boston/New England Emmy Award-winner and television personality and star of "The Folklorist," John Horrigan. These video programs with presentations and discussions can be accessed at the IEEE Boston Section video portal at https://vimeo.com/user18608275.

We are looking for any IEEE members that would like to appear on the program in the role of presenter or discussion expert. Simply reach out to Robert Alongi at the Boston Section at, ieeebostonsection@gmail.com.

Call for Course Speakers/Organizers

IEEE's core purpose is to foster technological innovation and excellence for the benefit of humanity. The IEEE Boston Section, its dedicated volunteers, and over 8,500 members are committed to fulfilling this core purpose to the local technology community through chapter meetings, conferences, continuing education short courses, and professional and educational activities.

Twice each year a committee of local IEEE volunteers meet to consider course topics for its continuing education program. This committee is comprised of practicing engineers in various technical disciplines. In an effort to expand these course topics for our members and the local technical community at large, the committee is publicizing this CALL FOR COURSE SPEAKERS AND ORGANIZERS.

The Boston Section is one of the largest and most technically divers sections of the IEEE. We have over 20 active chapters and affinity groups.
If you have an expertise that you feel might be of interest to our members, please submit that to our online course proposal form on the section's website (www.ieeeboston.org) and click on the course proposal link (direct course proposal form link is **http://ieeeboston.org/course-proposals/** . Alternatively, you may contact the IEEE Boston Section office at ieeebostonsection@gmail.com or 781 245 5405.

- **Honoraria can be considered for course lecturers**
- Applications oriented, practical focused courses are best (all courses should help attendees expand their knowledge based and help them do their job better after completing a course
- Courses should be no more than 2 full days, or 18 hours for a multi-evening course
- Your course will be publicized to over 10,000 local engineers
- You will be providing a valuable service to your profession
- Previous lecturers include: Dr. Eli Brookner, Dr. Steven Best, Colin Brench, to name a few.

Entrepreneurs' Network – 7:00PM, Tuesday, April 5

Scaling Your Startup – When & How

Where: Online Webinar
This event is FREE, however, registration is required.
Register Now: https://us02web.zoom.us/webinar/register/WN_zKerVVGYReSOpzkeACGeMg

There are important strengths that startup company founders and entrepreneurs have launch companies, to prove a value proposition and establish some traction in the market, and that success might land you seed investment. But to land an A round, you need to establish a business model that can scale to a level that can justify the kind of return A round investors would seek.
This webinar is on that important topic of scaling your company.

• How do you establish a business model that can scale?
• How do you implement the scale-up of your business? For example, what resources you are going to need to bring to bear to successfully commence the scale up of your business.
• What are the inflection points? For instance, at what level of scaleup, will you achieve an inflection point sufficient that your company might attract potential acquirers and a potential liquidity event for you and your investors?
• How do you scale to a successful exit or a liquidity event?

This is all part of our topic for the evening "Scaling Your Startup – When & How." The discussion will also include how there are different pathways to scaleup in different fields and how scaleups vary between tech, life science, and e-commerce companies. Our two speakers and moderator are all well experienced on the topic, one from the field of media, a published author and business scaleup expert, the second is an investor in early stage companies and mentor to founders to help them succeed, and our moderator is adept at scaleup for e-commerce companies.

Both speakers will offer a presentation of different aspects of the topic, with input from our moderator, and we will end the evening with a fireside chat, with audience and moderator questions for each of the speakers on the panel. There will be also be a half hour of online networking available to registrants, after the presentations to give you the chance to "meet" virtually the speakers and moderator.

Event Schedule:
7:00 pm ET – Introduction - ENET Chairperson's announcements
7:10 pm ET - eMinute Pitch - Up to 3 Startup pitches
7:25 pm ET - Expert Panel - 4 expert speakers on the night's topic
8:10 pm ET - Q & A - Moderator and Audience Q & A with the speakers
8:30 pm ET – Networking
Panelists will be available afterward for responses to individual questions.

Speakers:

Theresa Ashby - PhD, MBA, Business Scaling Expert & Podcast Host, COO at Kaleidoscope Media Services.
Dr. Theresa Ashby has dedicated her efforts to helping companies and individuals enter the billion-dollar e-learning and digital product market. She helps her clients use digital products for business sustainability and scalability. With her offerings, The Systematic Method for Building an E-Course That Sells, and How to Effortless Build An Engaging Community, she created a business that serves clients around the world, while earning loyal clients and followers who value her "straight-forward" and "genuine" advice. She says, anyone who has a powerful message, can create business results that are reliable, repeatable, and worth celebrating. The time for you to enter the digital arena is now! Her best story is well suited to our topic on April 5: "Client success stories on how they built a scalable model, leveraged their intellectual capital and generated passive income. I can't wait to help your audience grow their business to the level they dream about."

Stacy Swider - Investor in early-stage deep-tech (in MA), VP Investments, MassVentures
MassVentures is one of the oldest ventures firms in the US. As a quasi-public we have an evergreen fund that provides patient capital. Beyond venture capital, we also manage several grant programs and a loan program. By statute, our funds are limited to MA companies. Our mission

focus on early-stage tough-tech and diverse founders. Previously, she served as the Director of the SBIR Center of Excellence at the UMass Lowell Research Institute. The Center helps small companies get non-dilutive, early-stage funding through the SBIR process (Small Business Innovation Research grants and contracts). Prior to her work with the SBIR Center, she had a career in materials science and applied physics, in the arena of crystalline materials for semiconductors, optics, and sensors. She also was a startup co-founder, and worked for businesses large and small. In her previous job, she won over $6M in SBIR funding, and brought novel nuclear detectors to commercialization. In addition to her full-time role at Nass Ventures, she is a mentor at MassChallenge Boston, Greentown Labs, MassMedic, Cleantech Open, M2D2. M. She has a BS in Materials Science from MIT.

Moderator and Organizers

Jennifer Crawford - Co-Founder @ Sparent, LLC, Fairfax, Virginia
Sparent provides virtual assistant services as well as virtual staffing. Since 2015, Jennifer has been and remains Founder @ PodFest Productions, LLC, the first podcasting conference in the DC area. This intimate conference informs, educates and empowers a diverse group of podcasters to share their unique voice with the world. Besides those companies in business, Jennifer also works and performs in the entertainment field. She is Co-Founder & Managing Imp (Imp Wrangler) @ The Improv Imps, where she performs with a group of people who love being funny together in front of an audience, with performances all over the DC metro area in both long and short form improv. Since her college days at George Mason University, in the period between 1991 and 2015, Jennifer has been owner and founder of several other companies, including a 4-year stink as CIC (chick in charge) @ Soundry Productions, where the company opened its doors after converting an auto body shop into a public coffee shop, performance space, art gallery and early co-working space for the creative class.

Robert A. Adelson - Principal, Business and Tax attorney @ Adelson & Associates, LLC. Chair Emeritus @ Boston Entrepreneurs' Network (ENET)
Rob has been an attorney for over 30 years specialized in business, tax, stock and options, employment, contracts, financing, trademarks and intellectual property. Rob began as an associate at major New York City law firms before returning home to Boston in 1985 where he has since been a partner in small and medium sized firms before joining Engel & Schultz LLP where he was a partner from 2004 to 2019. When the senior partners retired, he moved his law practice to his own firm, effective 1/1/2020. Rob represents entrepreneurs, start-ups and small companies, independent contractors and employees and executives. Rob is a frequent speaker on business law topics and author of numerous articles published in Boston Business Journal, Mass High Tech and other publications, plus more than thirty articles since 2016 on executive employment topics published by CEOWorld magazine. He has been named among the "Top 20 Boston Startup Lawyers" by ChubbyBrain.com, a website that provides tools for entrepreneurs. Rob has been on the ENET Board since 2002, was Vice Chair 2005-2009, and ENET Chairman 2009-2019. He was also a Co-Founder and Board member of the 128 Innovation Capital Group (2004 -2015). In 2016, he received the IEEE USA Professional Achievement award for "extreme dedication to the entrepreneurship community." He holds degrees from Boston University, B.A., summa cum laude, Northwestern University (Chicago), J.D., Law Review, and New York University, LL.M. in Taxation.

Entrepreneurs' Network – 7:00PM, Tuesday, April 19

The Art and Science of Startup Marketing

Where: Online Webinar
Register Now: https://bostonenet.org/events/the-art-and-science-of-startup-marketing/

Event Schedule:
7:00 pm ET – Introduction - ENET Chairperson's announcements
7:10 pm ET - eMinute Pitch - Up to 3 Startup pitches
7:25 pm ET - Expert Panel - 4 expert speakers on the night's topic
8:10 pm ET - Q & A - Moderator and Audience Q & A with the speakers
8:30 pm ET – Networking
More details coming soon!

Photonics Society - 7:00PM, Thursday, April 14

Ultrafast Fiber Lasers to Photothermal Material Interactions for Neuromodulation and Label-Free Imaging

Dr. Michelle Sander, Boston University

Insights from infrared light-matter interactions can offer novel pathways for material characterization, imaging, spectroscopy, micromachining and therapeutic approaches. To advance research fields from sensing, material manipulation to medicine, fiber lasers have played a key role as a source based on the compact light delivery, robustness and versatility.

Ultrafast thulium fiber lasers operating in the eye-safe wavelength region from 1.7 μm to 2.2 μm will be discussed as emerging sources for short wave infrared light that have fueled state-of-the art applications. A variety of femtosecond laser designs and their underlying pulse dynamics and polarization states for dual output sources and high repetition rates of GHz will be presented. With these femtosecond pulse durations, new nonlinear phenomena can be studied and glimpses into the dynamics of our universe can be revealed that cannot be captured with conventional electronics.

Relying on photothermal effects induced by these lasers when interacting with materials, direct modulation of neuronal responses, in particular nerve inhibition and modulation of action potentials in crayfish will be highlighted. We will further present a mid-infrared photothermal microscopy system to directly determine intrinsic material properties in a contactless fashion without the need for external tags and stains. This technique can address existing material analysis challenges of identifying low concentration specimens in nanoscience, chemical processes, and pathology. We will demonstrate that our imaging system can offer sub-diffraction-limited resolution for label-free and non-destructive analysis of chemical signatures and subcellular features in tissues.

Dr. Michelle Sander is an associate professor in the Department of Electrical and Computer Engineering at Boston University and an affiliated faculty with the Biomedical Engineering Department and the Materials Science and Engineering Division. She is a member of the BU Photonics Center, the BU-BUMC Cancer Center, the Center for Neurophotonics and the BU Nanotechnology Center. She received her PhD in Electrical Engineering from the Massachusetts Institute of Technology. Previously, she graduated with a German Diploma degree in Electrical Engineering from Germany and a Master of Science degree from the Georgia Institute of Technology. Dr. Sander received an AFOSR Young Investigator Award and a NSF CAREER Award. She serves on the Board of Governors for the IEEE Photonics Society and she is a senior editor for the IEEE Photonics Journal.

This meeting will be online only.
Registration Link
https://us02web.zoom.us/webinar/register/WN_g2wfq6NtQTiqC4BylmNZuA

The link to the meeting announcement is seen below.
http://www.bostonphotonics.org/seminar.aspx?seminar=351

Life Members and co-sponsoring Technology & Engineering Management Society – 7:00PM, Wednesday, April 20

Designing Music Biofeedback to Tune Balance Strategies Used During Turns

Location: VirtualSpeaker: Dr Antonia Zaferiou, Stevens Institute of Technology

The Musculoskeletal Control and Dynamics Lab at Stevens Institute of Technology has a mission to understand and improve movement mechanics during activities of daily living and athletic maneuvers. Dr. Antonia Zaferiou, Director of this lab, focuses some current research on how people concurrently manage multiple mechanical objectives during complex and ecologically valid whole-body rotations. Working towards improving movement mechanics, her team and collaborators have been developing sound biofeedback to facilitate motor learning using “sonification”, which conveys movement measurements through musical cues and soundscapes in real-time. In this talk, she will describe how the lab is uncovering strategies older adults use to balance during turning while walking and developing adaptive sonified biofeedback to facilitate balance training. This research includes critical goals to (a) personalize biofeedback so that it partners and adapts with each older adult’s motor behavior and (b) compare turns in real-world environments to those performed inside the lab using wearable sensors.

Dr. Antonia Zaferiou is an Assistant Professor in the Department of Biomedical Engineering at Stevens Institute of Technology. Dr. Zaferiou received her BE in Mechanical Engineering from The Cooper Union and MS and PhD in Biomedical Engineering from University of Southern California. After her doctoral studies, she was a postdoctoral researcher in the Department of Mechanical Engineering at University of Michigan. Before joining Stevens Institute of Technology, she directed a biomechanics lab in the Department of Orthopedic Surgery at Rush University Medical Center. She currently directs the Muscoskeletal control and dynamics Lab in the Biomedical Engineering department at the Stevens Institute of Technology

This talk will be held virtually 7:00PM – 8:00PM, Eastern Time - Wednesday, April 20, 2022.

Please register on v-Tools to receive the virtual link. https://events.vtools.ieee.org/m/309028.

Electromagnetic Compatibility Society – 4:00PM, Wednesday, April 20

Common Misconceptions about Inductance & Current Return Path

Speaker: Dr. Cheung-Wei Lam, Distinguished Engineer and Chief EM Technologist at Apple

Location: Zoom Webinar

In today's high-speed system designs, a good understanding of inductance and current return path is important for signal integrity and EMI control. Unfortunately, several key concepts about the two have often been misunderstood or overlooked. This presentation will discuss the main concepts and some common misconceptions about inductance and current return path. Examples will be given at the chip and PCB levels.

Dr. Cheung-Wei Lam is a Distinguished Engineer and Chief EM Technologist at Apple. Prior to Apple, he was a co-founder at Transcendent Design Technology and a principal engineer at Quad Design Technology. Dr. Lam received B.S. from the Chinese University of Hong Kong, and S.M./Ph.D. from MIT.

He currently serves as an IEEE EMC Society Respected Speaker and was a past IEEE EMC Society Distinguished Lecturer.

Zoom Webinar Meeting Link / Information will be shared with our mailing list and provided closer to the event. It will also be posted on our IEEE EMC Society Boston Chapter website under the Events section: www.emcsbostonchapter.com/events

Microwave Theory and Techniques Society – 6:00PM, Monday, April 25

Distributed Phased Arrays: Challenges and Recent Progress

Speaker: Professor Jeffrey Nanzer
Location: Webinar

Registration:
https://events.vtools.ieee.org/m/306306

There has been significant research devoted to the development of distributed microwave wireless systems in recent years. The progression from large, single-platform wireless systems to collections of smaller, coordinated systems on separate platforms enables significant benefits for radar, remote sensing, communications, and other applications. The ultimate level of coordination between platforms is at the wavelength level, where separate platforms operate as a coherent distributed system. Wireless coherent distributed systems operate in essence as distributed phased arrays, and the signal gains that can be achieved scale proportionally to the number of transmitters squared multiplied by the number of receivers, providing potentially dramatic increases in wireless system capabilities. Distributed array coordination requires accurate control of the relative electrical states of the nodes. Generally, such control entails wireless frequency synchronization, phase calibration, and time alignment, but for remote sensing operations, phase control also requires high-accuracy knowledge of the relative positions of the nodes in the array to support beamforming.

This lecture presents an overview of the challenges involved in distributed phased array coordination, and describes recent progress on microwave technologies that address these challenges. Requirements for achieving distributed phase coherence at microwave frequencies are discussed, including the impact of component non-idealities such as oscillator drift on beamforming performance. Architectures for enabling distributed beamforming are reviewed, along with the relative challenges between transmit and receive beamforming. Microwave and millimeter-wave technologies enabling wireless phase-coherent synchronization are discussed, focusing on technologies for high-accuracy internode ranging, wireless frequency transfer, and high-accuracy time alignment. The lecture concludes with a discussion of open challenges in distributed phased arrays, and where microwave technologies may play a role.

Jeffrey Nanzer (S'02-M'08-SM'14) received the B.S. degree in electrical engineering and computer engineering from Michigan State University, East Lansing, MI, USA, in 2003, and the M.S. and Ph.D. degrees in electrical engineering from The University of Texas at Austin, Austin, TX, USA, in 2005 and 2008, respectively. From 2008 to 2009, he was a Postdoctoral Fellow with Applied Research Laboratories, The University of Texas at Austin, where he was involved in designing electrically small HF antennas and communication systems. From 2009 to 2016, he was with The Johns Hopkins University Applied Physics Laboratory, Laurel, MD, USA, where he created and led the Advanced Microwave and Millimeter-Wave Technology Section. In 2016, he joined the Department of Electrical and Computer Engineering, Michigan State University, where he is currently the Dennis P. Nyquist Associate Professor. He has authored or co-authored more than 150 refereed journal and conference papers, authored the book Microwave and Millimeter-Wave Remote Sensing for Security Applications (Artech House, 2012), and co-authored chapters in the books Wireless Transceiver Circuits (Taylor and Francis, 2015) and Short-Range Micro-Motion Sensing: Hardware, signal processing and machine learning (IET, 2019). His current research interests include distributed arrays, radar and remote sensing, antennas, electromagnetics, and microwave photonics.

Dr. Nanzer was a founding member and the First Treasurer of the IEEE APS/MTT-S Central Texas Chapter. He is also a member of the IEEE Antennas and Propagation Society Education Committee and the USNC/URSI Commission B. He was a recipient of the Outstanding Young Engineer Award from the IEEE Microwave Theory and Techniques Society in 2019, the DARPA Director's Fellowship in 2019, the National Science Foundation (NSF) CAREER Award in 2018, the DARPA Young Faculty Award in 2017, and the JHU/APL Outstanding Professional Book Award in 2012. He has served as the Vice-Chair for the IEEE Antenna Standards Committee from 2013 to 2015 and the Chair of the Microwave Systems Technical Committee (MTT-16) of the IEEE Microwave Theory and Techniques Society from 2016 to 2018. He is also an Associate Editor of the IEEE TRANSACTIONS ON ANTENNAS AND PROPAGATION.

DSP for Wireless Communications

Dates & Times: **Live Workshops: 6:00 - 7:30PM EST; Thursdays, April 7, 14, 21, 28, May 5**
First Video Release, April 1, 2022, additional videos released weekly in advance of that week's live session!

Speaker: **Dan Boschen**

Location: **Zoom Webinar**

New Format Combining Live Workshops with Pre-recorded Video - This is a hands-on course providing pre-recorded lectures that students can watch **on their own schedule** and an **unlimited number of times** prior to live Q&A/Workshop sessions with the instructor. Ten 1.5 hour videos released 2 per week while the course is in session will be available for up to two months after the conclusion of the course...until July 5, 2022.

Course Summary

This course is a fresh view of the fundamental and practical concepts of digital signal processing applicable to the design of mixed signal design with A/D conversion, digital filters, operations with the FFT, and multi-rate signal processing. This course will build an intuitive understanding of the underlying mathematics through the use of graphics, visual demonstrations, and applications in GPS and mixed signal (analog/digital) modern transceivers. This course is applicable to DSP algorithm development with a focus on meeting practical hardware development challenges in both the analog and digital domains, and not a tutorial on working with specific DSP processor hardware.

Now with Jupyter Notebooks!

This long-running IEEE Course has been updated to include Jupyter Notebooks which incorporates graphics together with Python simulation code to provide a "take-it-with-you" interactive user experience. No knowledge of Python is required but the notebooks will provide a basic framework for proceeding with further signal processing development using that tools for those that have interest in doing so.

This course will not be teaching Python, but using it for demonstration. A more detailed course on Python itself is covered in a separate IEEE Course "Python Applications for Digital Design and Signal Processing".

Students will be encouraged but not required to load all the Python tools needed, and all set-up information for installation will be provided prior to the start of class.

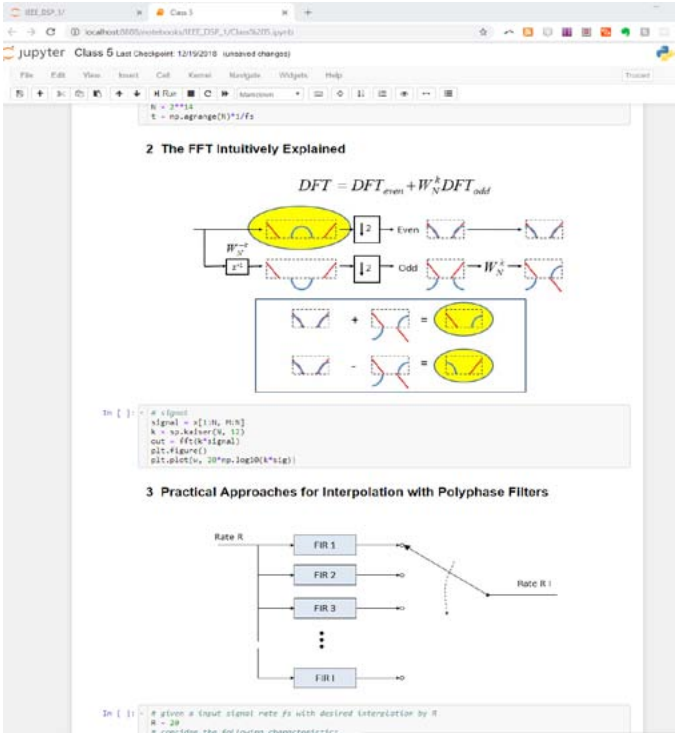

Target Audience:

All engineers involved in or interested in signal processing applications. Engineers with significant experience with DSP will also appreciate this opportunity for an in-depth review of the fundamental DSP concepts from a different perspective than that given in a traditional introductory DSP course.

Benefits of Attending/ Goals of Course:

Attendees will build a stronger intuitive understanding of the fundamental signal processing concepts involved

Linear Phase FIR Filter
(8-bit quantized filter coefficients)

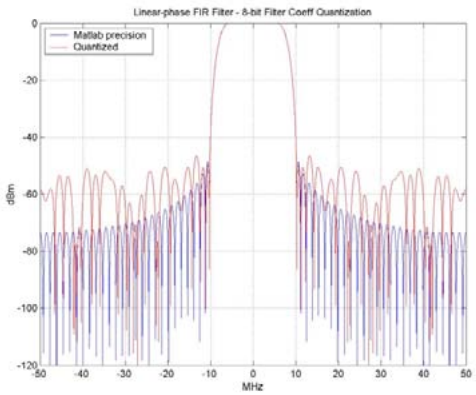

with digital filtering and mixed signal analog and digital design. With this, attendees will be able to implement more creative and efficient signal processing architectures in both the analog and digital domains. The knowledge gained from this course will have immediate practical value for any work in the signal processing field.

Multi-stage CIC

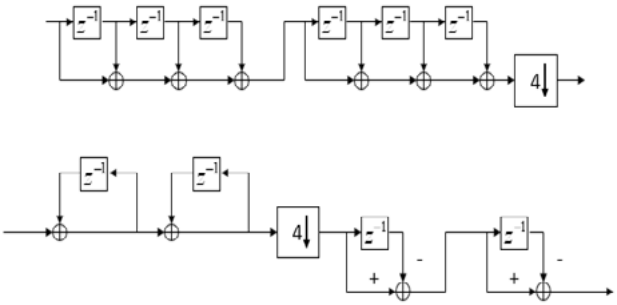

Topics / Schedule:

Class 1: Correlation, Fourier Transform, Laplace Transform

Class 2: Sampling and A/D Conversion, Z –transform, D/A Conversion

Class 3: IIR and FIR Digital filters, Direct Fourier Transform

Class 4: Windowing, Digital Filter Design, Fixed Point vs Floating Point

Class 5: Fast Fourier Transform, Multi-rate Signal Processing, Multi-rate Filters

Speaker's Bio:

Dan Boschen has a MS in Communications and Signal Processing from Northeastern University, with over 25 years of experience in system and hardware design for radio transceivers and modems. He has held various positions at Signal Technologies, MITRE, Airvana and Hittite Microwave designing and developing transceiver hardware from baseband to antenna for wireless communications systems. Dan is currently at Microchip (formerly Microsemi and Symmetricom) leading design efforts for advanced frequency and time solutions.

For more background information, please view Dan's Linked-In page at: http://www.linkedin.com/in/dan-boschen

Sliding Correlation

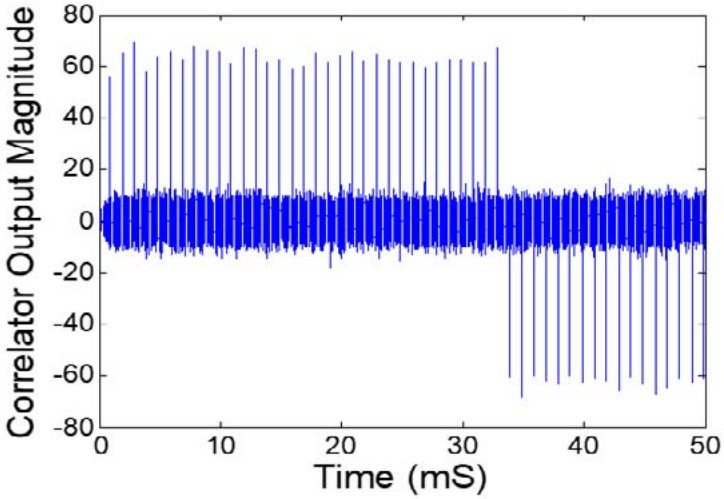

Decision (Run/Cancel) Date for this Course is Monday, April 4, 2022

IEEE Members	**$190**
Non-members	**$210**

https://ieeeboston.org/event/digital-signal-processing-webinar/?instance_id=3210

Digital Signal Processing (DSP) for Software Radio

Dates & Times: **Live Workshops: 6:00 - 7:30PM EST; Tuesdays, May 31, June 7, 14, 21, 28**
First Video Release, May 25, 2022, additional videos released weekly in advance of that week's live session!

Speaker: **Dan Boschen**

Location: **Zoom**

Course Information will be distributed on Wednesday, May 25, 2022 in advance of and in preparation for the first live workshop session.
Attendees will have access to the recorded session and exercises for two months (until August 28) after the last live session ends!

This is a hands-on course providing pre-recorded lectures that students can watch on their own schedule and an unlimited number of times prior to live Q&A/Workshop sessions with the instructor. Ten 1.5 hour videos released 2 per week while the course is in session will be available for up to two months after the conclusion of the course.

Course Summary This course builds on the IEEE course "DSP for Wireless Communications" also taught by Dan Boschen, further detailing digital signal processing most applicable to practical real-world problems and applications in radio communication systems. Students need not have taken the prior course if they are familiar with fundamental DSP concepts such as the Laplace and Z transform and basic digital filter design principles.

This course brings together core DSP concepts to address signal processing challenges encountered in radios and modems for modern wireless communications. Specific areas covered include carrier and timing recovery, equalization, automatic gain control, and considerations to mitigate the effects of RF and channel distortions such as multipath, phase noise and amplitude/phase offsets.

Dan builds an intuitive understanding of the underlying mathematics through the use of graphics, visual demonstrations, and real-world applications for mixed signal (analog/digital) modern transceivers. This course is applicable to DSP algorithm development with a focus on meeting practical hardware development challenges, rather than a tutorial on implementations with DSP processors.

Now with Jupyter Notebooks! This long-running IEEE Course has been updated to include Jupyter Notebooks which incorporates graphics together with Python simulation code to provide a "take-it-with-you" interactive user experience. No knowledge of Python is required but the notebooks will provide a basic framework for proceeding with further signal processing development using that tools for those that have interest in doing so.

This course will not be teaching Python, but using it for demonstration. A more detailed course on Python itself is covered in a separate IEEE Course routinely taught by Dan titled "Python Applications for Digital Design and Signal Processing".

All set-up information for installation of all tools used will be provided prior to the start of class.

Target Audience: All engineers involved in or interested in signal processing for wireless communications. Students should have either taken the earlier course "DSP for Wireless Communications" or have been sufficiently exposed to basic signal processing concepts

if you are uncertain about your background or if you would like more information on the course.

Benefits of Attending/ Goals of Course:
Attendees will gain a strong intuitive understanding of the practical and common signal processing implementations found in modern radio and modem architectures and be able to apply these concepts directly to communications system design.

Topics / Schedule:
Class 1: DSP Review, Radio Architectures, Digital Mapping, Pulse Shaping, Eye Diagrams

Class 2: ADC Receiver, CORDIC Rotator, Digital Down Converters, Numerically Controlled Oscillators

Class 3: Digital Control Loops; Output Power Control, Automatic Gain Control

Class 4: Digital Control Loops; Carrier and Timing Recovery, Sigma Delta Converters

Class 5: RF Signal Impairments, Equalization and Compensation, Linear Feedback Shift Registers

Speaker's Bio:
Dan Boschen has a MS in Communications and Signal Processing from Northeastern University, with over 25 years of experience in system and hardware design for radio transceivers and modems. He has held various positions at Signal Technologies, MITRE, Airvana and Hittite Microwave designing and developing transceiver hardware from baseband to antenna for wireless communications systems and has taught courses on DSP to international audiences for over 15 years. Dan is a contributor to Signal Processing Stack Exchange https://dsp.stackexchange.com/, and is currently at Microchip (formerly Microsemi and Symmetricom) leading design efforts for advanced frequency and time solutions.

Decision (Run/Cancel) Date for this Course is Friday, May 20, 2022

IEEE Members	**$190**
Non-members	**$210**

For more background information, please view Dan's Linked-In page at: http://www.linkedin.com/in/dan-boschen

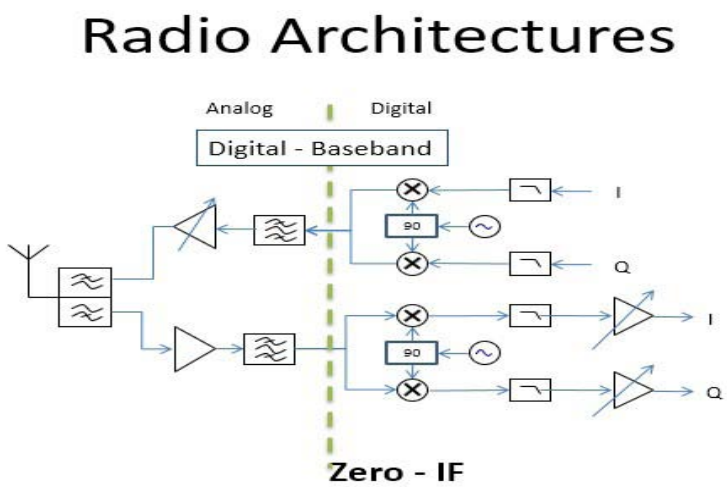

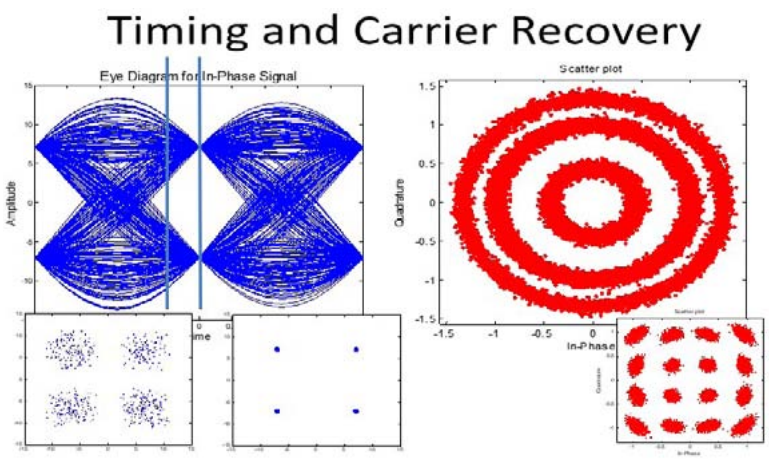

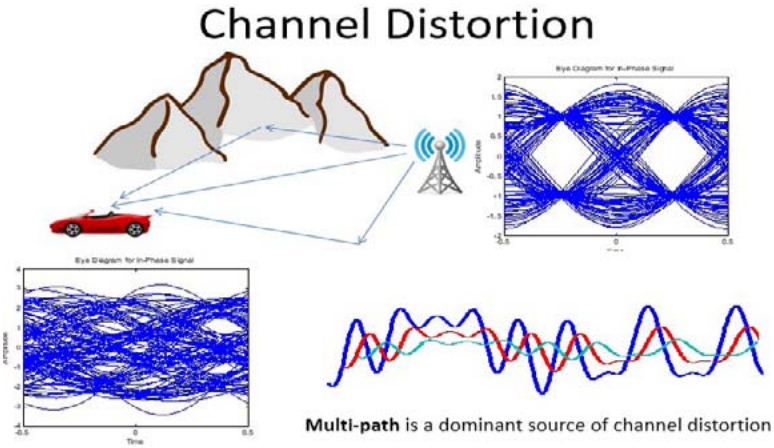

https://ieeeboston.org/event/dspswradio/?instance_id=3219

Python Applications for Digital Design and Signal Processing

Dates & Times: **Live Workshops: 6:00 - 7:30PM EDT; Tuesdays, Sept. 13, 20, 27, Oct. 4**
First Video Release, September 7, 2022, additional videos released weekly in advance of that week's live session!

Speaker: **Dan Boschen**

Location: **Zoom**

This is a hands-on course combining pre-recorded lectures with live Q&A and workshop sessions in the popular and powerful open-source Python programming language.
Course Information will be distributed on Wednesday, September 7, 2022 in advance of and in preparation for the first live workshop session.
Attendees will have access to the recorded session and exercises for two months (until December 4) after the last live session ends!

New Format with Pre-Recorded Videos: The course format has been updated to release pre-recorded video lectures that students can watch on their own schedule, and an unlimited number of times, prior to live Q&A workshop sessions on Zoom with the instructor. The videos will also be available to the students for viewing for up to two months after the conclusion of the course.

Overview: Dan provides simple, straight-forward navigation through the multiple configurations and options, providing a best-practices approach for quickly getting up to speed using Python for modelling and analysis for applications in signal processing and digital design verification. Students will be using the Anaconda distribution, which combines Python with the most popular data science applications, and Jupyter Notebooks for a rich, interactive experience.

The course begins with basic Python data structures and constructs, including key "Pythonic" concepts, followed by an overview and use of popular packages for scientific computing enabling rapid prototyping for system design.

During the course students will create example designs including a sigma delta converter and direct digital synthesizer both in floating point and fixed point. This will include considerations for cycle and bit accurate models useful for digital design verification (FPGA/ASIC), while bringing forward the signal processing tools for frequency and time domain analysis.

Jupyter Notebooks: This course makes extensive use of Jupyter Notebooks which combines running Python code with interactive plots and graphics for a rich user experience. Jupyter Notebooks is an open-source web-based application (that can be run locally) that allows users to create and share visually appealing documents containing code, graphics, visualizations and interactive plots. Students will be able to interact with the notebook contents and use "take-it-with-you" results for future applications in signal processing.

Target Audience: This course is targeted toward users with little to no prior experience in Python, however familiarity with other modern programming languages and an exposure to object-oriented constructs is very helpful. Students should be comfortable with basic signal processing concepts in the frequency and time domain. Familiarity with Matlab or Octave is not required, but the equivalent operations in Python using the NumPy package will be provided for those students that do currently use Matlab and/or Octave for signal processing applications.

Benefits of Attending / Goals of Course: Attendees will gain an overall appreciation of using Python and quickly get up to speed in best practice use of Python

Topics / Schedule:

Pre-recorded lectures (3 hours each) will be distributed Friday prior to each week's workshop dates. Workshop/ Q&A Sessions are 6 - 7pm on the dates listed below:

Class 1

Topic 1: Intro to Jupyter Notebooks, the Spyder IDE and the course design examples. Core Python constructs.

Class 2

Topic 2: Core Python constructs; iterators, functions, reading writing data files.

Class 3

Topic 3: Signal processing simulation with popular packages including NumPy, SciPy, and Matplotlib.

Class 4

Topic 4: Bit/cycle accurate modelling and analysis using the design examples and simulation packages

Speaker's Bio: Dan Boschen has a MS in Communications and Signal Processing from Northeastern University, with over 25 years of experience in system and hardware design for radio transceivers and modems. He has held various positions at Signal Technologies, MITRE, Airvana and Hittite Microwave designing and developing transceiver hardware from baseband to antenna for wireless communications systems and has taught courses on DSP to international audiences for over 15 years. Dan is a contributor to Signal Processing Stack Exchange https://dsp.stackexchange.com/, and is currently at Microchip (formerly Microsemi and Symmetricom) leading design efforts for advanced frequency and time solutions.

For more background information, please view Dan's Linked-In page (https://www.linkedin.com/in/dan-boschen/)

Decision (Run/Cancel) Date for this Course is Friday, September 2, 2022

IEEE Members	**$190**
Non-members	**$210**

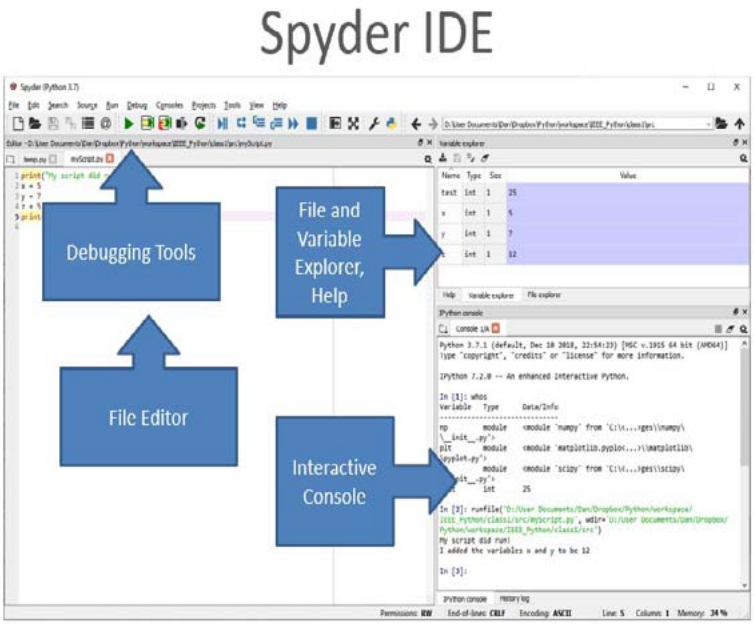

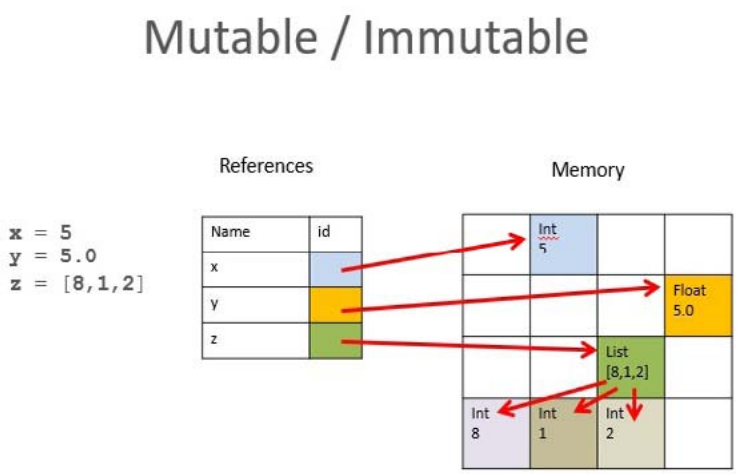

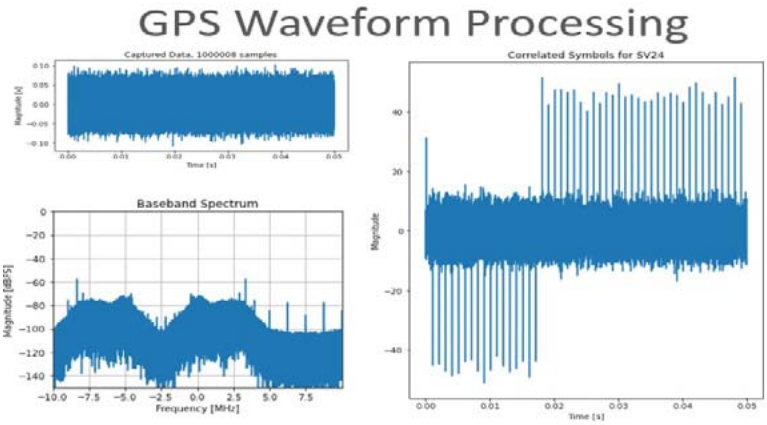

https://ieeeboston.org/event/pythonapplications/?instance_id=3224

Submission Date Extended to May 15, 2022

CALL FOR PAPERS

2022 IEEE International Symposium on Phased Array Systems and Technology

Revolutionary Developments in Phased Arrays

IEEE BOSTON SECTION

11–14 October 2022
The Westin Waltham Boston
Waltham, Massachusetts, USA
www.array2022.org

Sponsors

Platinum

MITRE
LOCKHEED MARTIN
ANALOG DEVICES
BAE SYSTEMS

Gold

str
NORTHROP GRUMMAN
CAES PIONEERING ADVANCED ELECTRONICS
amazon | project kuiper

Silver

LINCOLN LABORATORY MASSACHUSETTS INSTITUTE OF TECHNOLOGY
AyarLabs

Technical Co-sponsors

MTT-S
AESS
APS

About the Symposium

Phased array systems continue to be a rapidly evolving technology with steady advances motivated by the challenges presented to modern military and commercial applications. This symposium will present the most recent advances in phased array technology and present a unique opportunity for members of the international community to interact with colleagues in the field of Phased Array Systems and Technology.

Note: *there will be a virtual component of the conference to accommodate potential travel restriction or concerns due to Covid19*

Suggested Topics

- 5G Arrays
- Array Design
- Array Measurements
- Array Signal Processing
- Automotive Arrays
- Beamforming & Calibration
- Dual Polarized Arrays
- MIMO Arrays
- Medical Applications
- Metamaterial Phased Arrays
- mmWave and Terahertz
- T/R Modules

Special Sessions

- European Phased-Arrays Systems and Technology *Michael Brandfass, Hensoldt Sensors GmbH, Alfonso Farina, Leonardo SpA*
- Low Frequency Arrays.....*Vito Mecca, MIT Lincoln Laboratory*
- Intelligent Arrays ..... *Kevin Rudd, Ben Epstein, DARPA*
- SATCOM Arrays ..... *Ryan Stevenson, Kymeta*
- Weather Arrays .....*Kurt Hondl, NOAA*
- Wideband Arrays .....*Tim Hancock, DARPA*

Publication Information

All paper submissions must be in IEEE dual-column format and must be 2 pages (minimum) to 8 pages (maximum) in length including figures, and must be submitted in PDF format via the symposium website. All papers will be peer reviewed.

Authors of papers presented at the conference will be invited to submit an expanded version to the IEEE T-MTT Mini-Special Issue.

Important Dates

- Full paper submission .....~~12 March 2022~~ 15 May 2022
- Author notification .....~~30 April 2022~~ 10 July 2022
- Author registration deadline .....01 Sept 2022

BOSTON 2022

Conference Committee

Conference Chair:
Sean Duffy
MIT Lincoln Laboratory (MIT LL)

Vice Chair:
Wajih Elsallal, MITRE

Technical Program Chair:
David Mooradd, MIT LL

Technical Program Vice Chair:
Glenn Hopkins, GTRI

Special Sessions Chairs:
Matt Facchine, NGC
Kenneth E. Kolodziej, MIT LL

Plenary Session Chairs:
Dan Culkin, NGC
Ellen Ferraro, Raytheon

Tutorials Chairs:
Frank van Vliet, TNO
Will Moulder, MIT LL

Student Program Chairs:
Justin Kasemodel, Raytheon
Matilda Livradaru, STR

Sponsorship/ Exhibits Chairs:
Mark McClure, STR
Marc Angelucci, Lockheed

Publicity Chairs:
Bradley T. Perry, MIT LL
Cara Yang Kataria, MIT LL

Social Media Chair:
Elizabeth Kowalski, MIT LL

Publications Chairs:
Philip Zurek, MIT LL
Mark Fosberry, MITRE

Poster Sessions Chair:
Honglei Chen, The MathWorks

Arrangements/Finance:
Robert Alongi, IEEE Boston

Website:
Pierre Dufilie, Raytheon
Kathleen Ballos, Ballos Assoc.

International Liaison:
Alfonso Farina, Selex ES (retd.)

Advisors:
Alan J. Fenn, MIT LL
Jeffrey S. Herd, MIT LL
Eli Brookner, Raytheon (retrd.)
William Weedon, Applied Radar
Glenn Meurer, MITRE

Primary Sponsor:
IEEE Boston Section

Version 20220216

IEEE Advancing Technology for Humanity

Co-Sponsor: IEEE★USA

2022 IEEE Virtual International Symposium on Technologies for Homeland Security

November 14–15, 2022 • information@ieee-hst.org

Call for Papers

We are pleased to announce that the 21st Annual IEEE Symposium on Technologies for Homeland Security (HST '22), will be held November 14–15, 2022 as a virtual event. This symposium will bring together innovators from leading academia, industry, businesses, Homeland Security Centers of Excellence, and government agencies to provide a forum to discuss ideas, concepts, and experimental results.

HST is produced by IEEE with technical and organizational support from IEEE, IEEE Boston Section, IEEE-USA, MIT Lincoln Laboratory, and Raytheon Technologies. This year's event will once again showcase selected technical papers highlighting emerging technologies in the following areas:

- **Border Security, Critical Infrastructure Protection, and Law Enforcement**
- **Climate Change and Homeland Resilience**
- **Cyber Security**
- **Frontier and Emerging Technologies**

We are currently seeking technical paper submissions in the above areas. This year, the Homeland Security Technology community has come together to respond and develop technology to address the challenges of COVID-19 and we anticipate HST'22 to reflect that focus. Accordingly, all areas are inclusive of technologies related to the global COVID-19 pandemic. Papers examining the feasibility of transition to practice will also be considered. All areas will cover the following common topics:

- Strategy, threat characterization, operational concepts, and risk analysis;
- Modeling, simulation, experimentation, exercises & training; and
- Testbeds, standards, performance, and evaluations.

Contact Information

For more detailed information on the Call for Papers, as well as Sponsorship and Exhibit Opportunities, visit the website: http://ieee-hst.org/ or email: info@ieee-hst.org. Submissions should be sent to the following website: https://cmt3.research.microsoft.com/HST2022/

Important Dates *(All deadlines are by midnight Eastern Standard Time)*

Paper Extended Abstract Deadline:	June 15, 2022
Paper Acceptance Notification:	August 15, 2022
Final Paper Submission Deadline:	October 15, 2022

Organizing Committee

General Chair:	James Flavin, MIT Lincoln Laboratory
Technical Chairs:	Gerald Larocque, MIT Lincoln Laboratory Anthony Serino, Raytheon
Local Arrangement Chair:	Bob Alongi, IEEE Boston
Sponsorship/Exhibits Chair:	Bob Alongi, IEEE Boston
Special Advisor to the Chair:	Lennart Long, EMC Consultant
Registration Chair:	Karen Safina, IEEE Boston

Technical Program Committee

Climate Change and Homeland Resilience	John Aldridge, MIT Lincoln Laboratory Deborah Campbell, MIT Lincoln Laboratory Lance Fiondella, UMass Dartmouth
Border Security, Critical Infrastructure Protection, and Law Enforcement	Bengt Borgstrom, MIT Lincoln Laboratory Rich Moro, Raytheon Arash Samani, Systems & Technology Research
Cyber Security	Hong Liu, UMass Dartmouth Firas Glaiel, Raytheon Thomas Edgar, Pacific Northwest National Laboratory

www.ieee-hpec.org

Chair & SIAM Liaison
Dr. Jeremy Kepner
Fellow, MIT Lincoln Laboratory

Senior Advisory Board Chair
Mr. Robert Bond
CTO, MIT Lincoln Laboratory

Technical Chair
Dr. Albert Reuther
MIT Lincoln Laboratory

Senior Advisory Board
Prof. Anant Agarwal
MIT CSAIL

Prof. Nadya Bliss
Arizona State University

Dr. Richard Games
Chief Engineer, MITRE
Intelligence Center

Mr. John Goodhue
Director, MGHPCC

Dr. Bernadette Johnson
Chief Venture Technologist
MIT Lincoln Laboratory

Dr. Richard Linderman,
ASDR&E

Mr. David Martinez
Associate Division Head
MIT Lincoln Laboratory

Dr. John Reynders
Vice President
Alexion Pharmaceuticals

Dr. Michael Stonebraker
Co-founder SciDB and Vertica;
CTO VoltDB and Paradigm4

Publicity Chair
Mr. Dan Campbell, GTRI

CFP Co-Chairs
Dr. Patrick Dreher, NCSU
Dr. Franz Franchetti, CMU

Publications Chair
Prof. Miriam Leeser
Northeastern University

Administrative Contact
Mr. Robert Alongi
IEEE Boston Section

A Note from the HPEC Committee:
IEEE HPEC 2022 will be presented as a virtual conference that will allow safe participation and full publication in IEEE Xplore.

The IEEE High Performance Extreme Computing Conference (HPEC '22) will be held in the Greater Boston Area, Massachusetts, USA on 19 – 23 September 2022. The HPEC charter is to be the premier conference in the world on the confluence of HPC and Embedded Computing.

The technical committee seeks new presentations that clearly describe advances in high performance extreme computing technologies, emphasizing one or more of the following topics:

- AI / Machine Learning
- Graph Analytics & Network Science
- Advanced Multicore Software Technologies
- Advanced Processor Architectures
- Automated Design Tools
- Big Data & Distributed Computing
- Big Data Meets Big Compute
- Case Studies & Benchmarking of Applications
- Cloud HPEC
- Computing Technologies for Challenging Form Factors
- ASIC & FPGA Advances
- Quantum and Non-Deterministic Computing
- Data Intensive Computing
- Digital Front Ends
- Fault-Tolerant Computing
- Embedded Cloud Computing
- General Purpose GPU Computing
- High Performance Data Analysis
- Interactive and Real-Time Supercomputing
- Mapping & Scheduling of Parallel & Real-Time Applications
- New Application Frontiers
- Open System Architectures
- Cyber Analysis and Secure Computing

HPEC accepts two types of submissions:	**IMPORTANT DATES**:
1. Full papers (up to 6 pages, references not included. Additional pages can be purchased for $200/page). 2. Extended abstracts (up to 2 pages, references included).	Submission Deadline: **JUL 09, 2022** Notification of Acceptance: **AUG 15, 2022** Camera Ready Deadline: **AUG 31, 2022**

Submissions to HPEC '22 should be **https://cmt3.research.microsoft.com/HPEC2022/**

Preference will be given to papers with strong, quantitative results, demonstrating novel approaches or describing high quality prototypes. Authors of full papers can mark their preference for a poster display or an oral presentation. Presenters who wish to have hardware demonstrations are encouraged to mark their preference for a poster display. Accepted extended abstracts will be displayed as posters. Papers can be declared "student paper" if the first author was a student when doing the presented work and will be eligible for the "IEEE HPEC Best Student Paper Award." Papers should not be anonymized. All paper and extended abstract submissions need to use the approved IEEE templates. Full paper submissions with the highest peer review ratings will be published by IEEE in the official HPEC proceedings available on IEEE eXplore. All other accepted submissions and extended abstracts are published on ieee-hpec.org.

Vendors are encouraged to sign up for vendor booths. This will allow vendors to present their HPEC technologies in an interactive atmosphere suitable for product demonstration and promotion. We welcome input (hpec@ieee-hpec.org) on tutorials, invited talks, special sessions, peer reviewed presentations, and vendor demos. Instructions for submitting will be posted on the conference web site shortly.

THE UNIVERSITY OF MAINE

Join us for this free webinar series!

Register online: ai.umaine.edu

Moderated by Dr. Julia Upton, Assoc. Prof. of Mathematics, Husson University
IEEE Maine Section Chair and IEEE Maine Communications/Computer Societies Joint Chapter Chair

Sponsored by IEEE Maine COM/CS Chapter

UMaine Artificial Intelligence

Explainable AI: Hope and Hypes in Healthcare

Thursday, April 7, 2022
12:00 - 1:00 p.m. EST (live via Zoom)

Hongfang Liu, PhD
Mayo Clinic

The Need for Explainable AI in Healthcare

Dr. Hongfang Liu is professor of Biomedical Informatics at the Center for Clinical and Translational Sciences at Mayo Clinic. Dr. Liu's primary research focus is to facilitate the secondary use of clinical data for clinical and translational science research and health care delivery improvement using data science, artificial intelligence, and informatics approaches. Her research has been extensively funded by the National Science Foundation and the National Institutes of Health (NIH) since 2003. She is a Fellow of the American College of Medical Informatics and Deputy Editor of Health Data Science Journal.

Making AI Models Interpretable and Explainable for Medical Image Analysis

Ahmad P. Tafti, PhD
University of Southern Maine

Dr. Tafti is an Assistant Professor of Computer Science at the University of Southern Maine, where he is leading the USM HexAI Research Laboratory. Dr. Tafti received his PhD in computer science with an emphasis on artificial intelligence and 3D computer vision. He is passionate about AI and its applications in healthcare.Dr. Tafti is the 2021 SiiM Imaging Informatics Innovator awardee, Mayo Clinic Transform the Practice awardee, an NVIDIA GPU awardee, and GE Healthcare Honorable Mention awardee. To date, he has authored 45+ peer-reviewed publications. Dr. Tafti has organized numerous workshops and tutorials on intelligent health systems and has served on the program committee of 15+ conferences, symposiums, and journals in AI and Digital Health Sciences.

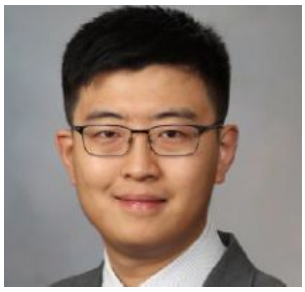

Yanshan Wang, PhD
University of Pittsburgh

Explainable AI in Clinical Natural Language Processing

Dr. Wang is vice chair of research and assistant professor with a primary appointment in the Department of Health Information Management, School of Health and Rehabilitation Sciences, and secondary appointments in the Intelligent Systems Program, School of Computing and Information, and the Department of Biomedical Informatics, School of Medicine, at the University of Pittsburgh. His research interests focus on artificial intelligence (AI), natural language processing (NLP) and machine learning methodologies and applications in health care.

His research goal is to leverage different dimensions of data and data-driven computational approaches to meet the needs of clinicians, researchers, patients and customers. He joined Pitt in June 2021 from the Mayo Clinic where he still holds an adjunct Assistant Professor position.